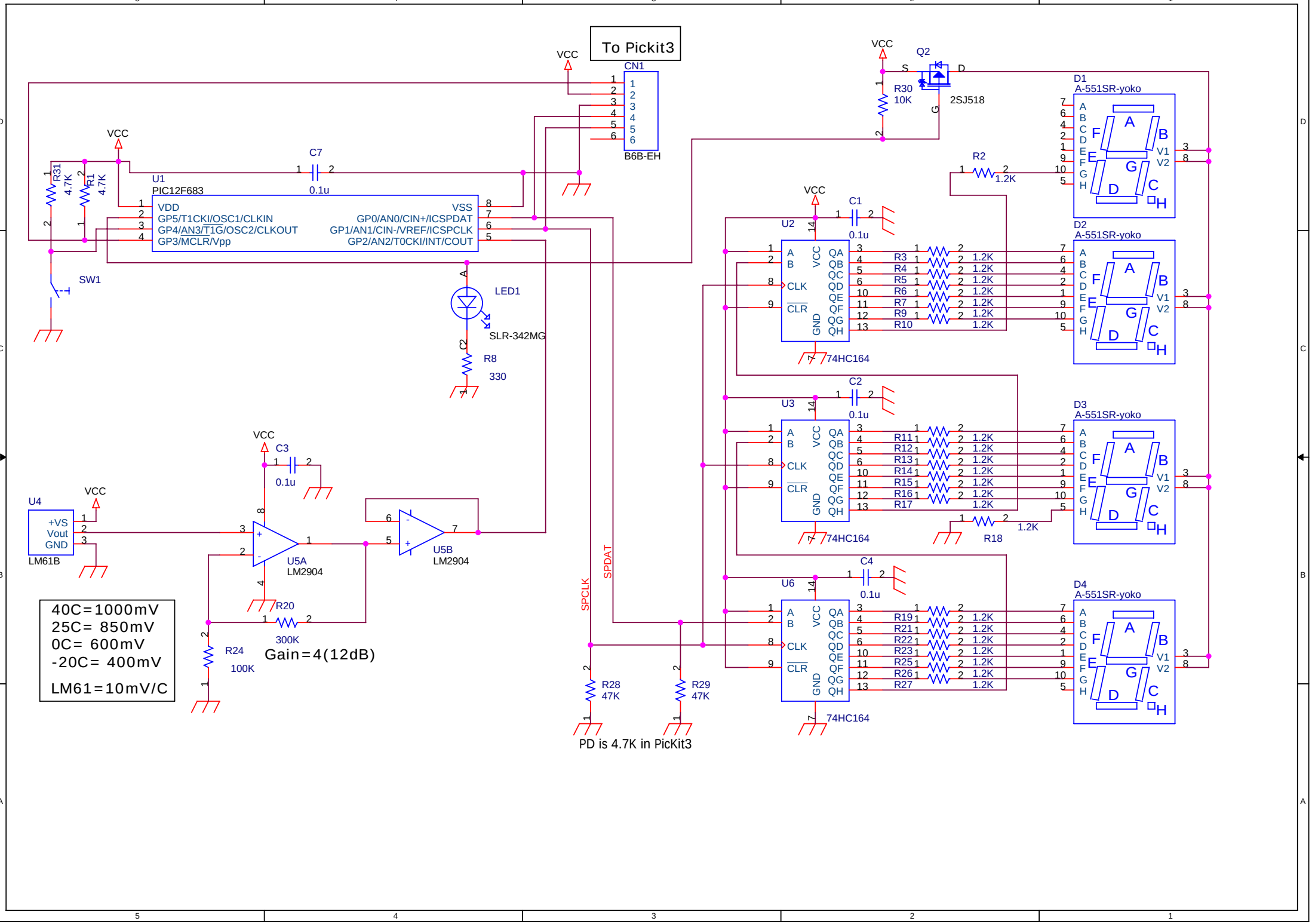
To Pickit3
CN1
B6B-EH
VCC
U1
PIC12F683
VDD
GP5/T1CKI/OSC1/CLKIN
GP4/AN3/T1G/OSC2/CLKOUT
GP3/MCLR/Vpp
VSS
GP0/AN0/CIN+/ICSPDAT
GP1/AN1/CIN-/VREF/ICSPCLK
GP2/AN2/T0CKI/INT/COUT
C7
0.1u
R31
4.7K
R1
4.7K
SW1
LED1
SLR-342MG
R8
330
Q2
2SJ518
R30
10K
D1
A-551SR-yoko
D2
A-551SR-yoko
D3
A-551SR-yoko
D4
A-551SR-yoko
R2
1.2K
U2
U3
U6
74HC164
C1
C2
C4
R3
R4
R5
R6
R7
R9
R10
R11
R12
R13
R14
R15
R16
R17
R18
R19
R21
R22
R23
R25
R26
R27
SPCLK
SPDAT
R28
47K
R29
47K
PD is 4.7K in PicKit3
U4
+VS
Vout
GND
LM61B
C3
U5A
LM2904
U5B
LM2904
R20
300K
R24
100K
Gain=4(12dB)
40C=1000mV
25C= 850mV
0C= 600mV
-20C= 400mV
LM61=10mV/C